ZINC OXIDE VARISTOR

FEATURES

- Widely voltage range 18v-1.8kv
- Fast response to the rapidly increase Voltage (Mu sec.)
- Excellent non-linearity voltage
- Symmetric V-1 characteristics
- Great withstanding surge current (2000A/cm2)

HOW TO ORDER

F	NR	05	K	180	T

Series Code	Non-Linear Resistor	Element Diameter (mm)		Tolerance		Varistor (V)	bulk dimensions	
F	NR	05	5	K	±10%	$180=18x10^0$	(leave blank)	Bulk
		40	40	M	±20%	$181=18x10^1$	T	Tape & Reel
						$182=18x10^2$		

CHARACTERISTICS

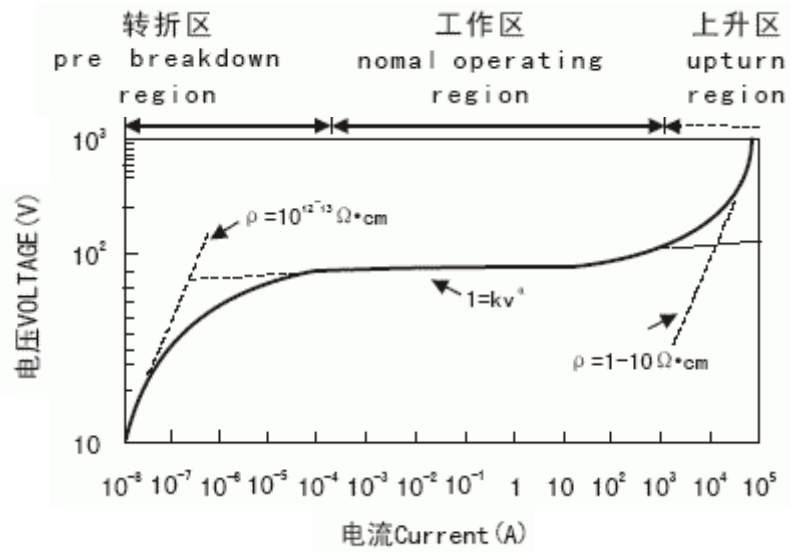

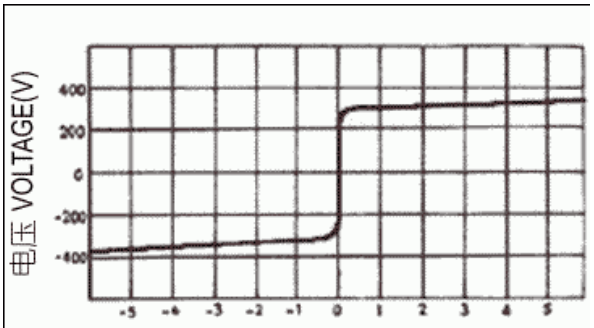

图 Fig 2
Voltage Current Characteristic

TEST CONDITION

Item	Test Methods
Operating Temperature Range	-40°C~+85°C
Storage Temperature Range	-40°C~+125°C
Varistor Voltage	Element Diameter<5mm Test Current 0.1mA(DC)
Max Clamping Voltage	Element Diameter≥5mm Test Current 1mA(DC) Current Wave shape 8x20μs
Energy	Current input of Rectangular Wave
Max Withstanding Surge Current	Current Wave shape 8x20μs

ZINC OXIDE VARISTOR

ZINC OXIDE VARISTOR SELECTION (ONLY REFERENCE)

Varistor voltage

Varistor voltage should be more than the operating voltage in over-voltage protective circuit The formula is shown as the following:

V1mA+a.v/b.c
a-power Voltage ripple coefficient usually take 1.2
v-DC Voltage (significant value only AC power)
b-Tolerance usually take 0.85
c-Ageing coefficient usually take 0.9
The calibrated Value is 1.5 times of DC voltage, the face value should be $\sqrt{2}$ times of the calibrated value because of the peak voltage in alternating current power.
Withstanding surge current

In general, withstanding surge current is max. Pulse current value which determined by test conditions such as wave-shape, shock times and interval time etc, the change ratio of Varistor Voltage should be less than ±10% of the initial Value. The shock time is the function of wave - shape, amplitude and interval time ,when the amplitude decrease to 50% of the initial, it should be increased to 2 times of the initial in order to keep the life longer, the surge current which is absorbed by the varistor should be less than max. Withstanding surge current.

GENERAL TYPE DIMENSIONS

General type is widely used in surge protection for IC. diode. trial semiconductor, thyristor, consumer, military industry telecommunication measuring & controlling instrument etc.

	(V) Varistor Voltage	D Max	D ±0.1	W ±1.0	H Max	T Max
05	18~ 82	7.0	0.6	5.0	10.0	3.5
	100~ 470	7.5	0.6	5.0	10.0	6.0
07	18~ 470	9.0	0.6	5.0	12.0	6.0
10	18~ 330	13.5	0.8	7.5	16.5	5.4
	360~ 1100	14.0	0.8	7.5	17.0	8.5
14	18~ 330	17.0	0.8	7.5	20.0	5.4
	360~ 1100	17.5	0.8	7.5	20.5	8.5
	180	25.0	0.8	15.0	30.0	12.0
20	18~ 330	23.0	1.0	10.0	27.0	5.5
	360~ 1100	24.0	1.0	10.0	28.0	9.0
	1800	25.0	1.0	15.0	30.0	12.0

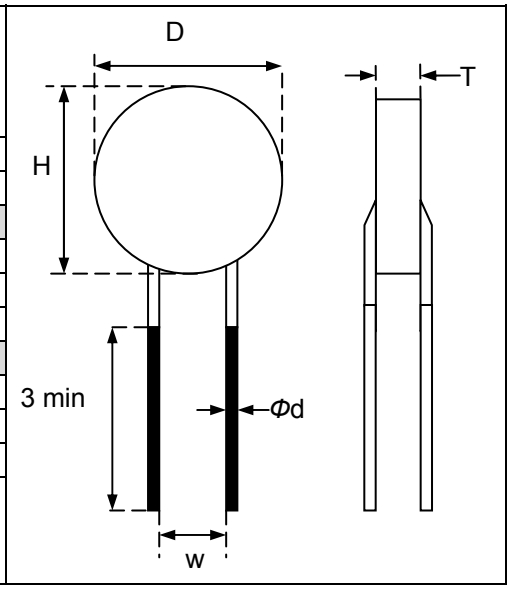

LIGHTNING ARRESTER TYPE

Lightning arrester type is ideal for semiconductor, signal relay, telecommunication, calibrating equipment, communication inter-medium station, distribution board, surge absorption and lightning-protection of all sorts of electric equipment because of the properties, with the Great withstanding surge current, wide voltage, quick responding speed and low residual voltage etc.

Part No.	Dimensions(mm)			
	D	T	W	d
FNR-25	30	12	15	1.5
FNR-32	38	13	18	1.5
FNR-40	45	13	20	1.5

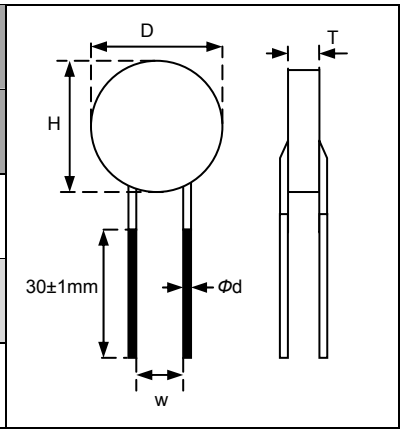

ZINC OXIDE VARISTOR

GENERAL TYPE PRODUCTS SERIES

Part No.	Varistor Voltage	Maximum Operating Voltage		Maximum Clamping Voltage		Maximum Withstanding Surge Current(8x20us)		Maximum Energy(J)		Maximum Rated Wattage	Capacitance (Reference) 1kHz
	V(v)	AC (v)	DC(v)	VC(v)	IP(A)	2Time(A)	1Time(A)	2ms	10/1000(us)	(W)	(PF)
FNR-05K180	18	11	14	40	1	50	100	0.3	0.4	0.01	1600
FNR-07K180	18	11	14	36	2.5	125	250	0.8	0.9	0.02	3500
FNR-10K180	18	11	14	36	5	250	500	1.5	2.1	0.05	7500
FNR-14K180	18	11	14	36	10	500	1000	3.5	4.0	0.1	18000
FNR-20K180	18	11	14	36	20	1000	2000	10.0	11.0	0.2	37000
FNR-05K220	22	14	18	48	1	50	100	0.4	0.5	0.01	1300
FNR-07K220	22	14	18	43	2.5	125	250	0.9	1.1	0.02	2800
FNR-10K220	22	14	18	43	5	250	500	2.0	2.5	0.05	6000
FNR-14K220	22	14	18	43	10	500	1000	4.0	5.0	0.1	15000
FNR-20K220	22	14	18	43	20	1000	2000	13.0	14.0	0.2	30000
FNR-05K270	27	17	22	60	1	50	100	0.5	0.6	0.01	1050
FNR-07K270	27	17	22	53	2.5	125	250	1.0	1.4	0.02	2000
FNR-10K270	27	17	22	53	5	250	500	2.5	3.0	0.05	4000
FNR-14K270	27	17	22	53	10	500	1000	5.0	6.0	0.1	10000
FNR-20K270	27	17	22	53	20	1000	2000	15.0	18.0	0.2	22000
FNR-05K330	33	20	26	73	1	50	100	0.6	0.8	0.01	900
FNR-07K330	33	20	26	65	2.5	125	250	1.2	1.7	0.02	1500
FNR-10K330	33	20	26	65	5	250	500	3.0	4.0	0.05	3000
FNR-14K330	33	20	26	65	10	500	1000	6.0	7.5	0.1	7500
FNR-20K330	33	20	26	65	20	1000	2000	20.0	13.0	0.2	17000
FNR-05K390	39	25	31	86	1	50	100	0.8	0.9	0.01	500
FNR-07K390	39	25	31	77	2.5	125	250	1.5	2.1	0.02	1350
FNR-10K390	39	25	31	77	5	250	500	3.5	4.6	0.05	2600
FNR-14K390	39	25	31	77	10	500	1000	7.0	8.6	0.1	6500
FNR-20K390	39	25	31	77	20	1000	2000	24.0	26.0	0.2	15000
FNR-05K470	47	30	38	104	1	50	100	1.0	1.1	0.01	450
FNR-07K470	47	30	38	93	2.5	125	250	1.8	2.5	0.02	1150
FNR-10K470	47	30	38	93	5	250	500	4.5	5.5	0.05	2200
FNR-14K470	47	30	38	93	10	500	1000	8.5	10.0	0.1	5500
FNR-20K470	47	30	38	93	20	1000	2000	30.0	33.0	0.2	13000
FNR-05K560	56	35	45	123	1	50	100	1.0	1.3	0.01	400
FNR-07K560	56	35	45	110	2.5	125	250	2.2	3.1	0.02	950
FNR-10K560	56	35	45	110	5	250	500	5.5	7.0	0.05	1800
FNR-14K560	56	35	45	110	10	500	1000	10.0	11.0	0.1	4500
FNR-20K560	56	35	45	110	20	1000	2000	35.0	41.0	0.2	110000
FNR-05K680	68	40	56	150	1	50	100	1.2	1.6	0.01	350
FNR-07K680	68	40	56	135	2.5	125	250	2.5	3.6	0.02	700
FNR-10K680	68	40	56	135	5	250	500	6.5	8.2	0.05	1300
FNR-14K680	68	40	56	135	10	500	1000	12.0	14.0	0.1	3300
FNR-20K680	68	40	56	135	20	1000	2000	40.0	46.0	0.2	7000
FNR-05K820	82	50	65	145	1	50	100	1.7	2.5	0.1	250
FNR-07K820	82	50	65	135	2.5	125	250	3.5	5.5	0.25	550
FNR-10K820	82	50	65	135	5	250	500	8.0	12.0	0.4	1800
FNR-14K820	82	50	65	135	10	500	1000	14.0	22.0	0.6	2900
FNR-20K820	82	50	65	135	20	1000	2000	27.0	38.0	1.0	5500
FNR-05K101	100	60	85	175	1	50	100	2.0	3.0	0.1	200
FNR-07K101	100	60	85	165	2.5	125	250	4.0	6.5	0.25	500
FNR-10K101	100	60	85	165	5	250	500	10.0	15.0	0.4	1400
FNR-14K101	100	60	85	165	10	500	1000	18.0	28.0	0.5	2400
FNR-20K101	100	60	85	165	20	1000	2000	30.0	45.0	1.0	4800

ZINC OXIDE VARISTOR

Part No.	Varistor Voltage	Maximum Operating Voltage		Maximum Clamping Voltage		Maximum Withstanding surge Current(8x20us)		Maximum Energy(J)		maximum Rated Wattage	Capacitance (Reference)1kHz
	V(v)	AC(v)	DC(v)	VC(v)	IP(A)	2Time(A)	1Time(A)	2ms	10/1000(us)	(W)	(PF)
FNR-05K121	120	75	100	210	5	200	400	2.5	4.0	0.1	170
FNR-07K121	120	75	100	200	10	600	1200	5.0	4.8	0.25	450
FNR-10K121	120	75	100	200	25	1250	2500	12.0	18.0	0.4	1100
FNR-14K121	120	75	100	200	50	2500	4500	20.0	32.0	0.6	1900
FNR-20K121	120	75	100	200	100	4000	6500	40.0	55.0	1.0	3800
FNR-05K151	150	95	125	260	5	200	400	3.0	4.8	0.1	140
FNR-07K151	150	95	125	250	10	600	1200	6.0	9.7	0.25	350
FNR-10K151	150	95	125	250	25	1250	2500	16.0	22.0	0.4	900
FNR-14K151	150	95	125	250	50	2500	4500	25.0	40.0	0.6	1500
FNR-20K151	150	95	125	250	100	4000	6500	50.0	70.0	1.0	3000
FNR-05K181	180	115	150	315	5	200	400	3.5	5.5	0.1	110
FNR-07K181	180	115	150	300	10	600	1200	8.0	1.0	0.25	300
FNR-10K181	180	115	150	300	25	1250	2500	18.0	25.0	0.4	700
FNR-14K181	180	115	150	300	50	2500	4500	30.0	50.0	0.6	1250
FNR-20K181	180	115	150	300	100	4000	6500	60.0	85.0	1.0	2500
FNR-05K201	200	130	170	355	5	200	400	4.0	6.5	0.1	80
FNR-07K201	200	130	170	340	10	600	1200	10.0	13.0	0.25	250
FNR-10K201	200	130	170	340	25	1250	2500	20.0	30.0	0.4	500
FNR-14K201	200	130	170	340	50	2500	4500	35.0	57.0	0.6	1000
FNR-20K201	200	130	170	340	100	4000	6500	70.0	95.0	1.0	2000
FNR-05K221	220	140	180	380	5	200	400	4.5	7.0	0.1	70
FNR-07K221	220	140	180	360	10	600	1200	10.0	14.0	0.25	250
FNR-10K221	220	140	180	360	25	1250	2500	23.0	32.0	0.4	450
FNR-14K221	220	140	180	360	50	2500	4500	40.0	60.0	0.6	1000
FNR-20K221	220	140	180	360	100	4000	6500	75.0	100.0	1.0	200
FNR-05K241	240	150	200	415	5	200	400	4.5	8.0	0.1	70
FNR-07K241	240	150	200	395	10	600	1200	10.0	15.0	0.25	2000
FNR-10K241	240	150	200	395	25	1250	2500	23.0	35.0	0.4	400
FNR-14K241	240	150	200	395	50	2500	4500	40.0	63.0	0.6	900
FNR-20K241	240	150	200	395	100	4000	6500	80.0	108.0	1.0	1800
FNR-05K271	270	175	225	475	5	200	400	6.0	8.5	0.1	65
FNR-07K271	270	175	225	455	10	600	1200	12.0	18.0	0.25	170
FNR-10K271	270	175	225	455	25	1250	2500	30.0	40.0	0.4	350
FNR-14K271	270	175	225	455	50	2500	4500	50.0	70.0	0.6	750
FNR-20K271	270	175	225	455	100	4000	6500	90.0	127.0	1.0	1600
FNR-05K301	300	200	250	525	5	200	400	6.0	9.0	0.1	55
FNR-07K301	300	200	250	500	10	600	1200	13.0	20.8	0.25	150
FNR-10K301	300	200	250	500	25	1250	2500	27.0	42.0	0.4	325
FNR-14K301	300	200	250	500	50	2500	4500	55.0	75.0	0.6	650
FNR-20K301	300	200	250	500	100	4000	6500	105.0	135.0	1.0	1400
FNR-05K331	330	210	275	580	5	200	400	6.5	9.0	0.1	60
FNR-07K331	330	210	275	550	10	600	1200	14.5	22.0	0.25	150
FNR-10K331	330	210	275	550	25	1250	2500	30.0	44.0	0.4	325
FNR-14K331	330	210	275	550	50	2500	4500	60.0	80.0	0.6	650
FNR-20K331	330	210	275	550	100	4000	6500	105.0	155.0	1.0	1400
FNR-05K361	360	230	300	620	5	200	400	7.5	10.0	0.1	50
FNR-07K361	360	230	300	595	10	600	1200	15.0	25.0	0.25	130
FNR-10K361	360	230	300	595	25	1250	2500	25.0	47.0	0.4	300
FNR-14K361	360	230	300	595	50	2500	4500	65.0	93.0	0.6	550
FNR-20K361	360	230	300	595	100	4000	6500	120.0	163.0	1.0	1200

ZINC OXIDE VARISTOR

Part No.	Varistor Voltage	Maximum Operating Voltage		Maximum Clamping Voltage		Maximum Withstanding surge Current(8/20us)		maximum Energy (J)		maximum Rated Wattage	Capacitance (Reference)1kHz
	V(v)	AC(v)	DC(v)	VC(v)	IP(A)	2Time(A)	1Time(A)	2ms	10/1000(us)	(W)	(PF)
FNR-05K391	390	250	320	675	5	200	400	8.0	12.0	0.1	50
FNR-07K391	390	250	320	650	10	600	1200	17.0	25.0	0.25	130
FNR-10K391	390	250	320	650	25	1250	2500	40.0	60.0	0.4	270
FNR-14K391	390	250	320	650	50	2500	4500	70.0	100.0	0.6	500
FNR-20K391	390	250	320	650	100	4000	6500	130.0	180.0	1.0	1000
FNR-05K431	430	275	350	745	5	200	400	9.0	13.0	0.1	45
FNR-07K431	430	275	350	710	10	600	1200	20.0	28.0	0.25	110
FNR-10K431	430	275	350	710	25	1250	2500	45.0	65.0	0.4	250
FNR-14K431	430	275	350	710	50	2500	4500	75.0	115.0	0.6	450
FNR-20K431	430	275	350	710	100	4000	6500	140.0	190.0	1.0	900
FNR-05K471	470	300	385	810	5	200	400	10.0	15.0	0.1	40
FNR-07K471	470	300	385	775	10	600	1200	20.0	30.0	0.25	100
FNR-10K471	470	300	385	775	25	1250	2500	45.0	70.0	0.4	230
FNR-14K471	470	300	385	775	50	2500	4500	80.0	125.0	0.6	440
FNR-20K471	470	300	385	775	100	4000	6500	150.0	220.0	1.0	900
FNR-10K511	510	318	415	840	25	1250	2500	45.0	70.0	0.4	200
FNR-14K511	510	318	415	840	50	2500	4500	80.0	125.0	0.6	380
FNR-20K511	510	318	415	840	100	4000	6500	150.0	220.0	1.0	800
FNR-10K561	560	350	455	925	25	1250	2500	45.0	70.0	0.4	180
FNR-14K561	560	350	455	925	50	2500	4500	80.0	125.0	0.6	345
FNR-20K561	560	350	455	925	100	4000	6500	150.0	220.0	1.0	700
FNR-10K621	620	380	505	1025	25	1250	2500	45.0	70.0	0.4	130
FNR-14K621	620	380	505	1025	50	2500	4500	80.0	125.0	0.6	250
FNR-20K621	620	380	505	1025	100	4000	6500	150.0	220.0	1.0	500
FNR-10K681	680	420	560	1120	25	1250	2500	45.0	70.0	0.4	130
FNR-14K681	680	420	560	1120	50	2500	4500	90.0	130.0	0.6	250
FNR-20K681	680	420	560	1120	100	4000	6500	160.0	230.0	1.0	460
FNR-10K751	750	460	615	1240	25	1250	2500	50.0	75.0	0.4	120
FNR-14K751	750	460	615	1240	50	2500	4500	100.0	143.0	0.6	230
FNR-20K751	750	460	615	1240	100	4000	6500	175.0	255.0	1.0	420
FNR-10K781	780	485	640	1290	25	1250	2500	50.0	80.0	0.4	120
FNR-14K781	780	485	640	1290	50	2500	4500	105.0	148.0	0.6	230
FNR-20K781	780	485	640	1290	100	4000	6500	180.0	265.0	1.0	420
FNR-10K821	820	510	670	1355	25	1250	2500	55.0	85.0	0.4	1100
FNR-14K821	820	510	670	1355	50	2500	4500	110.0	157.0	0.6	200
FNR-20K821	820	510	670	1355	100	4000	6500	190.0	282.0	1.0	400
FNR-10K911	910	550	745	1500	25	1250	2500	60.0	93.0	0.4	100
FNR-14K911	910	550	755	1500	50	2500	4500	120.0	175.0	0.6	180
FNR-20K911	910	550	755	1500	100	4000	6500	215.0	310.0	1.0	350
FNR-10K102	1000	625	825	1650	25	1250	2500	65.0	102.0	0.4	90
FNR-14K102	1000	625	825	1650	50	2500	4500	130.0	190.0	0.6	150
FNR-20K102	1000	625	825	1650	100	4000	6500	230.0	342.0	1.0	320
FNR-10K112	1100	680	895	1815	25	1250	2500	70.0	115.0	0.4	80
FNR-14K112	1100	680	895	1815	50	2500	4500	140.0	213.0	0.6	150
FNR-20K112	1100	680	895	1815	100	4000	6500	250.0	383.0	1.0	300
FNR-14K182	1800	1000	1465	2970	25	1250	2500	240.0	337.0	0.6	100
FNR-20K182	1800	1000	1465	2970	50	2500	4500	400.0	625.0	1.0	200

Part No.	Varistor Voltage	Maximum Operating Voltage		Maximum Clamping Voltage		maximum Withstanding surge Current(A)	maximum Energy(J)	maximum Rated Wattage	Capacitance (Reference)1kHz
	V(v)	AC(v)	DC(v)	VC(v)	IP(A)	8/20us	2ms	(W)	(PF)
FNR-25K470	47	30	38	89	40	1250	15	1.0	10000
FNR-32K470	47	30	38	89	40	2500	25	1.2	11000
FNR-40K470	47	30	38	89	40	5000	40	1.4	15000
FNR-25K560	56	35	45	106	40	1250	18	1.0	8000
FNR-32K560	56	35	45	106	40	2500	30	1.2	10000
FNR-40K560	56	35	45	106	40	5000	45	1.4	14000
FNR-25K680	68	40	56	129	40	1250	21	1.0	7000
FNR-32K680	68	40	56	129	40	2500	32	1.2	9000
FNR-40K680	68	40	56	129	40	5000	50	1.4	13000
FNR-25K820	82	50	65	156	200	5000	23	1.0	6000
FNR-32K820	82	50	65	156	200	10000	35	1.2	8000
FNR-40K820	82	50	65	156	200	20000	60	1.4	12000
FNR-25K101	100	60	85	190	200	5000	25	1.0	5000
FNR-32K101	100	60	85	190	200	10000	38	1.2	7000
FNR-40K101	100	60	85	190	200	20000	75	1.4	11500
FNR-25K121	120	75	100	216	200	5000	28	1.0	4000
FNR-32K121	120	75	100	216	200	10000	42	1.2	6000
FNR-40K121	120	75	100	216	200	20000	90	1.4	11000
FNR-25K151	150	95	125	270	200	5000	30	1.0	3000
FNR-32K151	150	95	125	270	200	10000	50	1.2	5000
FNR-40K151	150	95	125	270	200	20000	120	1.4	10500
FNR-25K201	200	130	170	360	200	5000	35	1.0	2400
FNR-32K201	200	130	170	360	200	10000	70	1.2	4700
FNR-40K201	200	130	170	360	200	20000	160	1.4	10000
FNR-25K221	220	140	180	385	200	5000	40	1.0	2200
FNR-32K221	220	140	180	385	200	10000	90	1.2	4300
FNR-40K221	220	140	180	385	200	20000	180	1.4	9500
FNR-25K241	240	150	200	420	200	5000	60	1.0	2000
FNR-32K241	240	150	200	420	200	10000	120	1.2	4000
FNR-40K241	240	150	200	420	200	20000	220	1.4	9000
FNR-25K271	270	175	225	473	200	5000	90	1.0	1700
FNR-32K271	270	175	225	473	200	10000	150	1.2	3500
FNR-40K271	270	175	225	473	200	20000	260	1.4	750
FNR-25K361	360	230	300	612	200	5000	120	1.0	1400
FNR-32K361	360	230	300	612	200	10000	180	1.2	3000
FNR-40K361	360	230	300	612	200	20000	300	1.4	6000
FNR-25K391	390	250	320	663	200	5000	150	1.0	1200
FNR-32K391	390	250	320	663	200	10000	220	1.2	2500
FNR-40K391	390	250	320	663	200	20000	340	1.4	5000

ZINC OXIDE VARISTOR

Part No.	Varistor Voltage	Maximum Operating Voltage		Maximum Clamping Voltage		Maximum Withstanding surge Current(A)	maximum Energy(J)	maximum Rated Wattage	Capacitance (Reference)1kHz
	V(v)	AC (v)	DC (v)	VC (v)	IP (A)	8/20us	2ms	(W)	(PF)
FNR-25K431	430	275	350	731	200	5000	180	1.0	1100
FNR-32K431	430	275	350	731	200	10000	260	1.2	2250
FNR-40K431	430	275	350	731	200	20000	380	1.4	4500
FNR-25K471	470	300	380	799	200	5000	220	1.0	1000
FNR-32K471	470	300	380	799	200	10000	300	1.2	1900
FNR-40K471	470	300	380	799	200	20000	420	1.4	3600
FNR-25K621	620	385	505	1054	200	5000	260	1.0	1500
FNR-32K621	620	385	505	1054	200	10000	340	1.2	3200
FNR-40K621	620	385	505	1054	200	20000	450	1.4	3300
FNR-25K681	680	420	560	1160	200	5000	300	1.0	1200
FNR-32K681	680	420	560	1160	200	10000	380	1.2	3000
FNR-40K681	680	420	560	1160	200	20000	500	1.4	3000
FNR-25K751	750	460	615	1275	200	5000	350	1.0	1100
FNR-25K751	750	460	615	1275	200	10000	450	1.2	27000
FNR-25K751	750	460	615	1275	200	20000	550	1.4	2500
FNR-25K781	780	485	640	1326	200	5000	370	1.0	1050
FNR-32K781	780	485	640	1326	200	10000	480	1.2	2600
FNR-40K781	780	485	640	1326	200	20000	600	1.4	2450
FNR-25K821	820	510	670	1400	200	5000	400	1.0	1000
FNR-32K821	820	510	670	1400	200	10000	530	1.2	2400
FNR-40K821	820	510	670	1400	200	20000	640	1.4	2400
FNR-25K911	910	550	745	1550	200	5000	420	1.0	900
FNR-32K911	910	550	745	1550	200	10000	580	1.2	2200
FNR-40K911	910	550	745	1550	200	20000	700	1.4	2200
FNR-25K102	1000	625	825	1700	200	5000	450	1.0	800
FNR-32K102	1000	625	825	1700	200	10000	630	1.2	1900
FNR-40K102	1000	625	825	1700	200	20000	800	1.4	2000
FNR-25K112	1100	680	895	1870	200	5000	500	1.0	700
FNR-32K112	1100	680	895	1870	200	10000	700	1.2	1700
FNR-40K112	1100	680	895	1870	200	20000	850	1.4	1800
FNR-32K182	1800	1000	1465	3060	200	10000	750	1.2	1600
FNR-40K182	1800	1000	1465	3060	200	20000	1000	1.4	1600

REEL DIMENSIONS

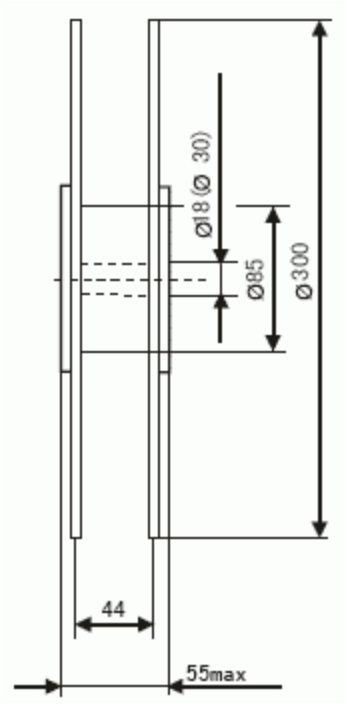

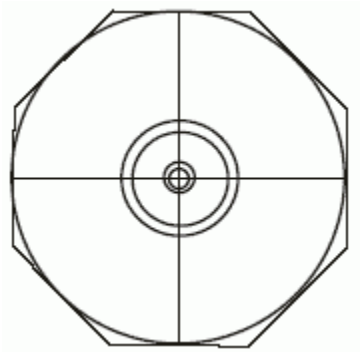

Ammo Packagin

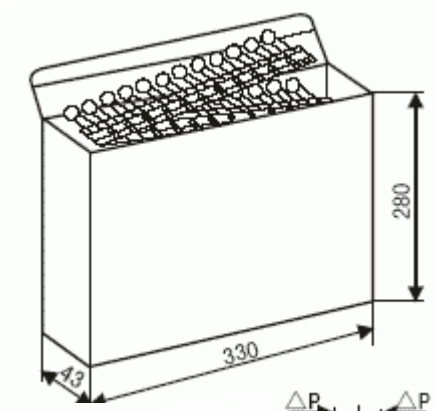

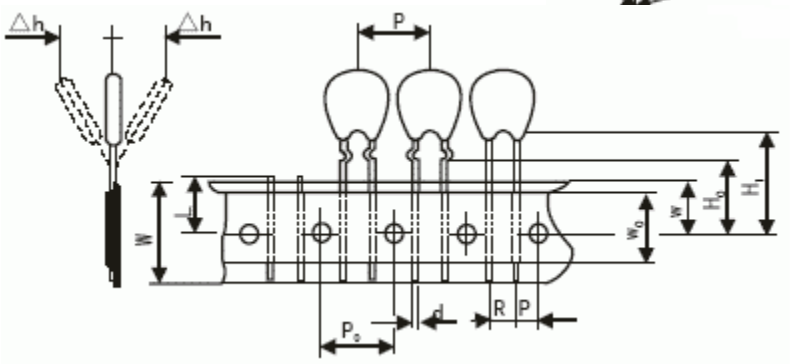

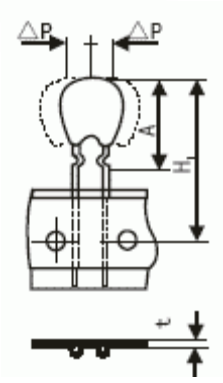

Item	Code				
Element	Φ	5	7	10	14
Body Diameter	D	7.5Max.	9.0Max.	13.5Max.	16.5Max.
Lead Wire Diameter	d	0.6		0.8	
Pitch of Component	p	12.7±1		25.4±1	
Feed Hole Pitch	p	12.7±3		12.7±0.3	
Feed Hole Center to Lead	p	3.85±0.7		7.5±0.8	
Lead to Lead Pitch	R	5±0.8		7.5±0.8	
Component Alignment	Δh	2.0Max.		2.0Max.	
Base paper Tape Width	W	18		18	
Adhesive	W0	13Min.		13Mon.	
Hole Position	W1	9±0.5		9±0.5	
Component Height	H1	30Max.		40Max.	
Lead-Wire Clinch Height	H0	16±0.5		1.0Max.	
Feed Hole Diameter	D0	4±0.2		4±0.2	
Total Tape Thickness	t	0.9Max.		0.9Max.	
Length of Clipped Lead	L	11Max.		11Max.	
Component Height from Seating Plane	A	13Max.	15Max.	19.5Max.	22.5Max.
Component Position Tolerance	ΔP	±1.3Max.		±2.0Max.	

AMMO AND REEL PACKAGING QUANTITY

Element Diameter	Quantity(pcs)	
	18~270(V)	300~470(V)
05	2500	1500
07	2500	1500
10	2000	1500
14	2000	1500